No. REQ'D.	PART NAME	PATT. No. PART No.	MAT'L.

NOTES:

A- INSTALL ITEM #20 (SCREW)IN ASSEMBLY

C- 3-1/2 REQ'D SOC. HD. ON G.E. AND D.E.

E- REQ'D ON 42 ONLY

F- NUT TO BE TORQUED TO:
3-1/2---110 LB.FT.
4-------190 LB.FT.
5-------250 LB.FT.

G- USE RED LOCKTITE ON SET SCREW THREADS.

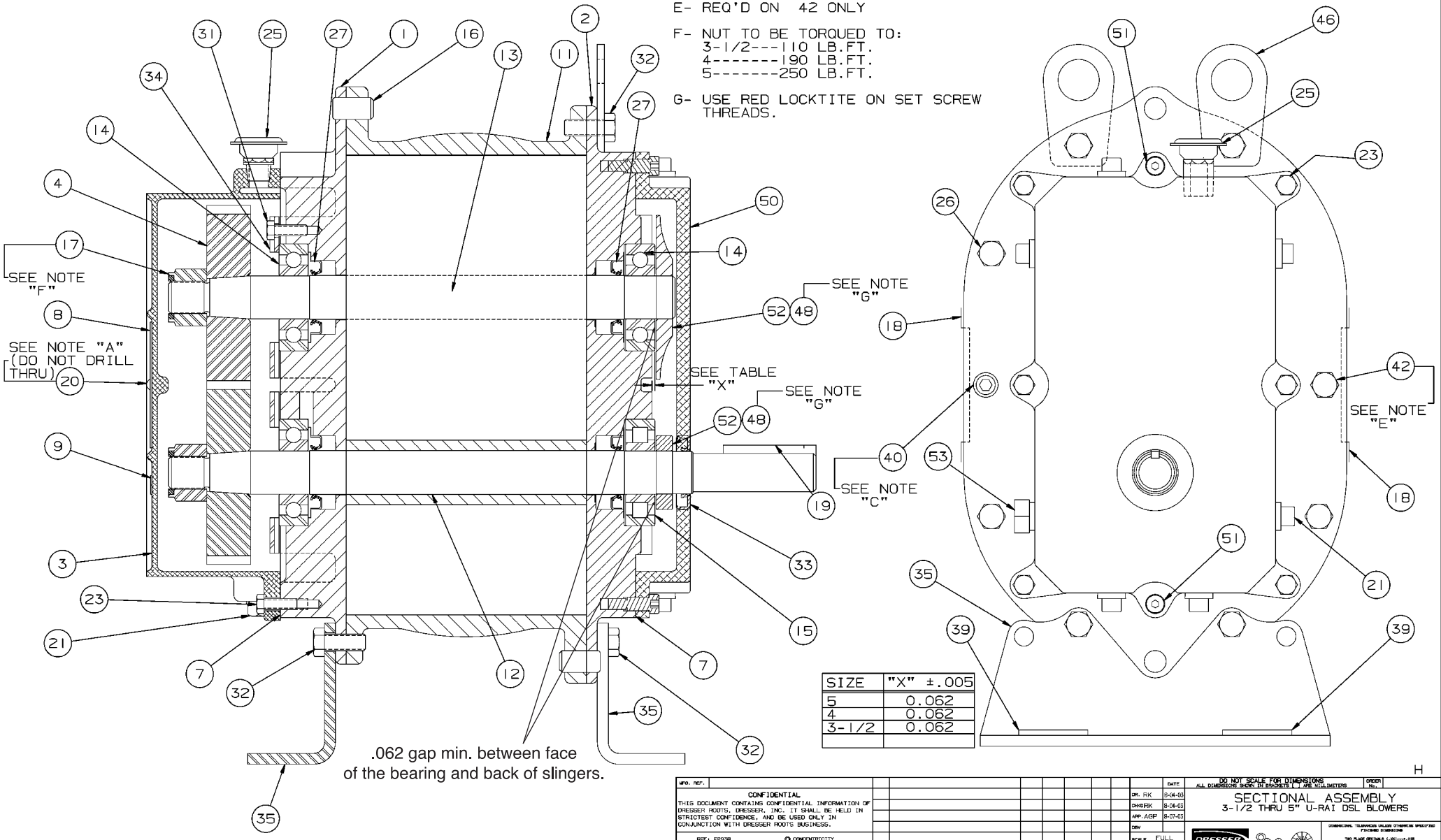

SIZE	"X" ±.005
5	0.062
4	0.062
3-1/2	0.062

H

MFG. REF.

CONFIDENTIAL
THIS DOCUMENT CONTAINS CONFIDENTIAL INFORMATION OF DRESSER ROOTS, DRESSER, INC. IT SHALL BE HELD IN STRICTEST CONFIDENCE, AND BE USED ONLY IN CONJUNCTION WITH DRESSER ROOTS BUSINESS.

REF: EP938
FLATNESS
ANGULARITY
PARALLELISM
TRUE POSITION
STRAIGHTNESS
CONCENTRICITY
PERPENDICULARITY
PROFILE OF LINE
PROFILE OF A SURFACE
DIAMETER
FINISH IN MICRO INCHES

REVISIONS	BY	DATE	CHANGE NOTICE	CHKD.	APP
A REMOVED ELBOW FROM BREATHER & NOTE "H"	GWH	1/11/05	7375V		

		DATE
DR. RK		8-04-03
CHKD RK		8-04-03
APP. AGP		8-07-03
DRV		
SCALE	FULL	
CAD FILE / DIRECTORY		

DO NOT SCALE FOR DIMENSIONS
ALL DIMENSIONS SHOWN IN BRACKETS [ ] ARE MILLIMETERS

ORDER No.

SECTIONAL ASSEMBLY
3-1/2 THRU 5" U-RAI DSL BLOWERS

DRESSER Roots

Dresser ROOTS, Dresser, Inc.
Houston, TX USA

DIMENSIONAL TOLERANCES UNLESS OTHERWISE SPECIFIED
FRACTIONS ±1/64±0.016

THIS IS NOT ORIGINAL 2-DIMENSIONAL DWG
FROM SOLID MODELS T30357-1/506
PROJECT: 47-28

T30356023 REV A

F:\FILE\FORM\DSIZE.BOM

No. REQ'D.	PART NAME	PATT. No. PART No.	MAT'L.

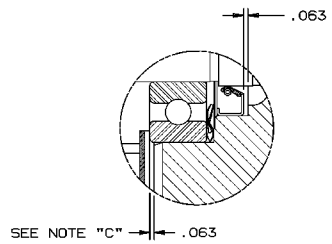

VIEW "X"
(GEAR END ONLY)

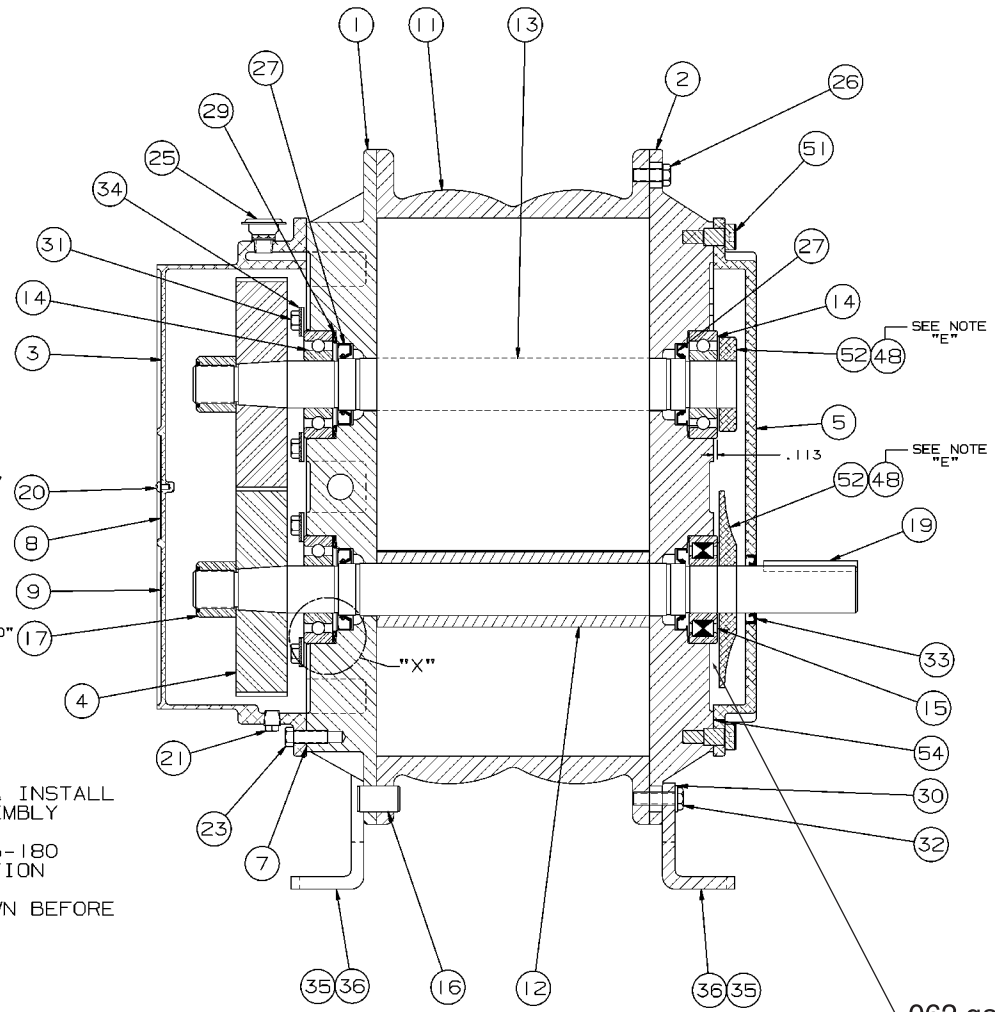

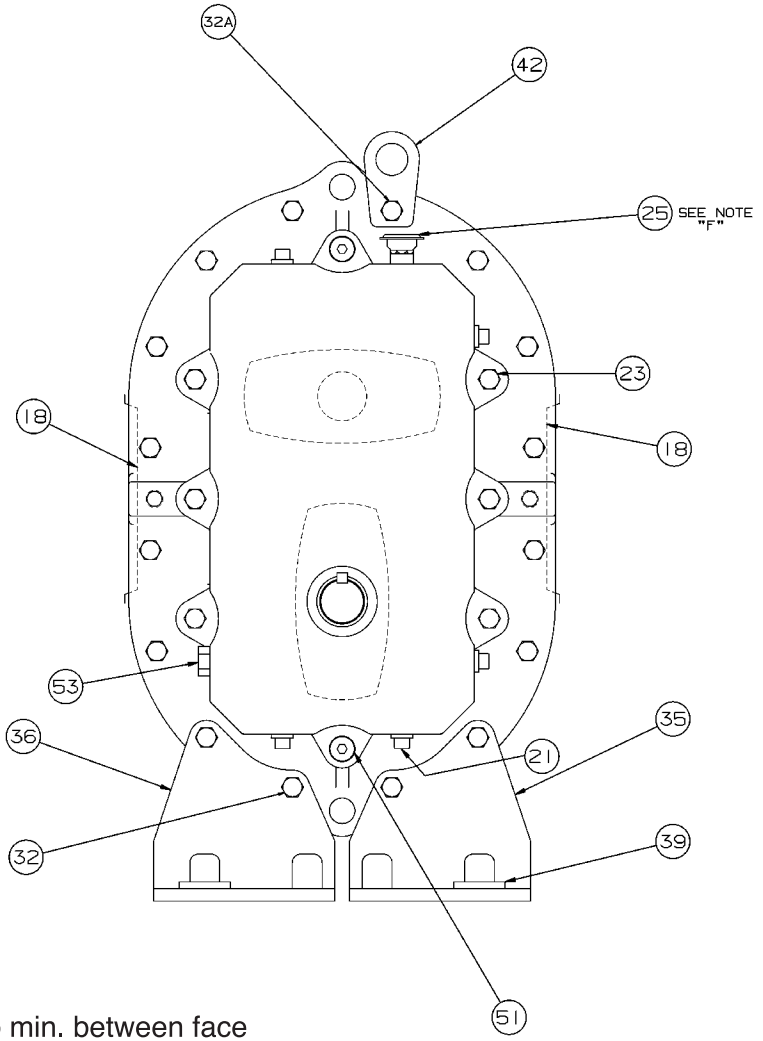

.062 gap min. between face of bearing and back of slingers.

NOTES

A #25(.150) DRILL 1/4 DP & INSTALL ITEM 20 (SCREWS) IN ASSEMBLY

B SEE OPERATING MANUAL IRB-180 FOR LUBRICATION INSTRUCTION

C INSTALL BEARINGS AS SHOWN BEFORE SETTING END CLEARANCE

D NUT TO BE TORQUED TO: 6"---400 LB. FT.

E USE RED LOCKTITE ON SET SCREW THREADS. MUST HAVE .06 CLERANCE BETWEEN SLINGER & BEARING

F LOOKING AT THE DRIVE SHAFT END,
a) BREATHER MUST BE MOUNTED ON RIGHT SIDE FOR VERTICAL, LEFT OR RIGHT DISCHARGE UNIT
b) BREATHER MUST BE MOUNTED ON LEFT SIDE FOR HORIZONTAL, TOP DISCHARGE UNIT

MFG. REF. 62600A23

CONFIDENTIAL
THIS DOCUMENT CONTAINS CONFIDENTIAL INFORMATION OF DRESSER ROOTS, DRESSER, INC. IT SHALL BE HELD IN STRICTEST CONFIDENCE, AND BE USED ONLY IN CONJUNCTION WITH DRESSER ROOTS BUSINESS.

REF: EP930
FLATNESS
ANGULARITY
PARALLELISM
TRUE POSITION
STRAIGHTNESS
CONCENTRICITY
PERPENDICULARITY
PROFILE OF LINE
PROFILE OF A SURFACE
DIAMETER
FINISH IN MICRO INCHES

	REVISIONS	BY	DATE	CHANGE NOTICE	CHKD.	APP
C	ADDED ITEM 32A	AKP	12/12/05	7631V		
B	REMOVED ITEM 44	AJK	6/21/05	7527V		AGP
A	REV NOTE "E" ADDED CLERANCE					
	ADDED ITEM 44& REVOMED 55&47	RDR	3/4/05	7419V		

XASR

		DATE
DR.	RK	8/14/03
CHKD.	RK	8/15/03
APP.	AGP	8/18/03
DEV		
SCALE	6"=1'-0"	
CAD FILE / DIRECTORY	T30382A23	

DO NOT SCALE FOR DIMENSIONS
ALL DIMENSIONS SHOWN IN BRACKETS [ ] ARE MILLIMETERS

ORDER No.

SECTIONAL ASSEMBLY
FOR 6" U-RAI DSL BLOWER
WITH TAPER GEAR FIT

DRESSER Roots

Dresser ROOTS, Dresser, Inc.
Houston, TX USA

DIMENSIONAL TOLERANCES UNLESS OTHERWISE SPECIFIED
FINISHED DIMENSIONS
TWO PLACE DECIMALS (.XX)=+-.015
THREE PLACE DECIMALS (.XXX)=+-.008
FRACTIONAL=+-1/64

T30382023 REV C

F:\FILE\FORM\DSIZE.DGM