FRAME	APPROX. OIL CAPACITY VERTICAL	APPROX. OIL CAPACITY HORIZONTAL
2-1/2	3.4 FL. OZ.	6.1 FL. OZ.
3-1/2	8.5 FL. OZ.	16 FL. OZ.
4	12.7 FL. OZ.	22.8 FL. OZ.
5	16.0 FL. OZ.	27.6 FL. OZ.

No. REQ'D.	PART NAME	PATT. No. PART No.	MAT'L.

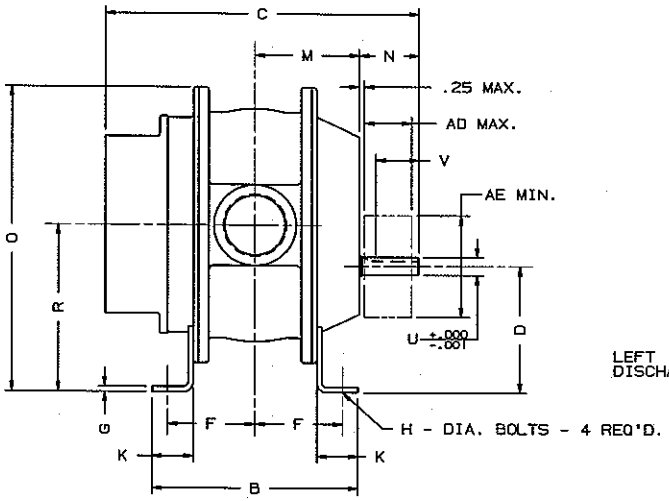

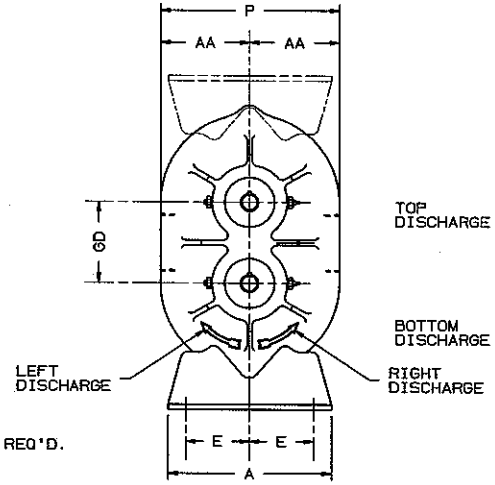

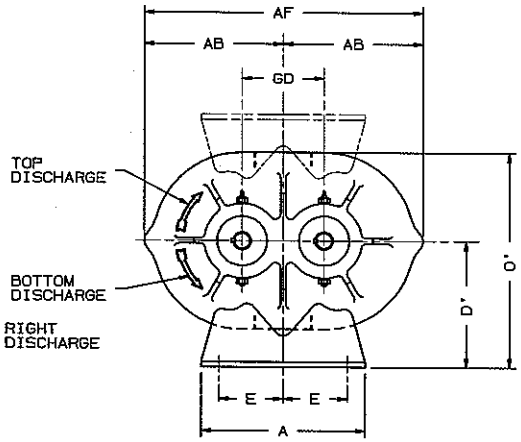

W - INLET & DISCHARGE
AD - SHEAVE WIDTH
AE - SHEAVE DIAMETER

ALL DIMENSIONS IN INCHES

UNIVERSAL® RAI BLOWER

H

FRAME SIZE	GD	A	B	C	D	D'	E MIN.	E MAX.	F MIN.	F MAX.	G	H	K	M	N	O	O'	P	R	U	KEYWAY	W NPT.	V	AA	AB	AD	AE	AF	APPROX. WT. LBS
22	2.5	5.13	5.00	9.75	3.75	3.75	1.50	2.00	2.00	2.00	.25	.38	1.25	2.63	2.50	9.63	6.88	6.25	5.00	.625	.188x.094	1"	1.91	3.13	4.63	1.75	4.00	9.25	32
24	"	"	7.00	11.75	"	"	"	"	3.00	3.00	"	"	"	3.63	"	"	"	"	"	"	"	2"	"	"	"	"	"	"	43
32	3.50	7.25	6.75	11.25	5.00	5.00	2.50	2.88	2.56	2.81	.25	.44	1.75	3.38	2.44	12.81	8.88	7.75	6.75	.750	.188x.094	1-1/4"	1.63	3.88	6.06	1.91	5.00	12.13	69
33	"	"	7.63	12.13	"	"	"	"	3.00	3.25	"	"	"	3.81	"	"	"	"	"	"		2"	"	"	"	"	"	"	74
36	"	"	10.00	14.63	"	"	"	"	4.18	4.44	"	"	"	5.00	2.56	"	"	"	"	"		2-1/2"	1.75	"	"	"	"	"	102
42	4.00	8.00	7.25	13.00	6.25	6.25	3.00	3.13	2.50	3.13	.31	.44	2.00	3.68	3.18	15.06	10.63	8.75	8.25	.875	.188x.094	1-1/2"	2.31	4.38	6.81	2.31	5.00	13.63	88
45	"	"	10.00	15.50	"	"	"	"	3.56	4.25	"	"	"	5.06	2.94	"	"	"	"	"		2-1/2"	2.13	"	"	"	"	"	109
47	"	"	11.75	17.63	"	"	"	"	4.63	5.38	"	"	"	5.94	3.31	"	10.50	8.50	"	"		3"	2.50	4.25	"	"	"	"	128
53	5.00	10.50	8.38	15.38	6.25	6.75	3.50	3.50	3.18	3.68	.25	.50	1.88	4.50	3.68	17.38	11.88	10.25	8.75	1.125	.25 x .125	2-1/2"	2.75	5.13	8.63	3.06	6.00	17.25	143
56	"	"	11.00	17.50	"	"	"	"	4.25	5.00	"	"	"	5.81	3.38	"	12.25	11.00	"	"	"	4"	2.50	5.50	"	"	"	"	170
59	"	"	14.00	21.00	"	"	"	"	6.00	6.50	"	"	"	7.31	3.88	"	"	"	"	"	"	4"	3.00	"	"	"	"	"	204

MFG. REF.

CONFIDENTIAL

THIS DOCUMENT CONTAINS CONFIDENTIAL INFORMATION OF ROOTS DIVISION, DRESSER INDUSTRIES, INC. IT SHALL BE HELD IN STRICTEST CONFIDENCE, AND BE USED ONLY IN CONJUNCTION WITH ROOTS DIVISION BUSINESS.

REF: EP938

- FLATNESS
- ANGULARITY
- PARALLELISM
- TRUE POSITION
- STRAIGHTNESS
- CONCENTRICITY
- PERPENDICULARITY
- PROFILE OF LINE
- PROFILE OF A SURFACE
- DIAMETER
- FINISH IN MICRO INCHES

/PARTS/XXAD 62795a21

	REVISIONS	BY	DATE	CHANGE NOTICE	CHKD.	APP
E	REVISION ON "C" FROM 18.00 TO 17.50					
D	UPDATED TITLE BLOCK 9/25/91					
C	CORRECTED FRAME 36 REM 8/14/90					
B	ADDED FRAME 32 RVE 6/22/90					
A	REV. FRAM 59 REM 6/9/88					

	DATE
DR. DB	8/29/84
CHKD.	
APP. FCR	
DBV	
SCALE	
CAD FILE / DIRECTORY	

DO NOT SCALE FOR DIMENSIONS
ALL DIMENSIONS SHOWN IN BRACKETS [ ] ARE MILLIMETERS

ORDER No.

ASSY DIM 22-59 URAI VH

DRESSER ROOTS

ROOTS DIVISION
DRESSER, INC.
CONNERSVILLE, IN USA

DIMENSIONAL TOLERANCES UNLESS OTHERWISE SPECIFIED
FINISHED DIMENSIONS
TWO PLACE DECIMALS [.XX]---±.010
THREE PLACE DECIMALS [.XXX]---±.005
FRACTIONAL---±1/64

62795021

REV E

F:\ FILE\ FORM\ BSIZE.BCM

No. REQ'D.	PART NAME	PATT. No. PART No.	MAT'L.

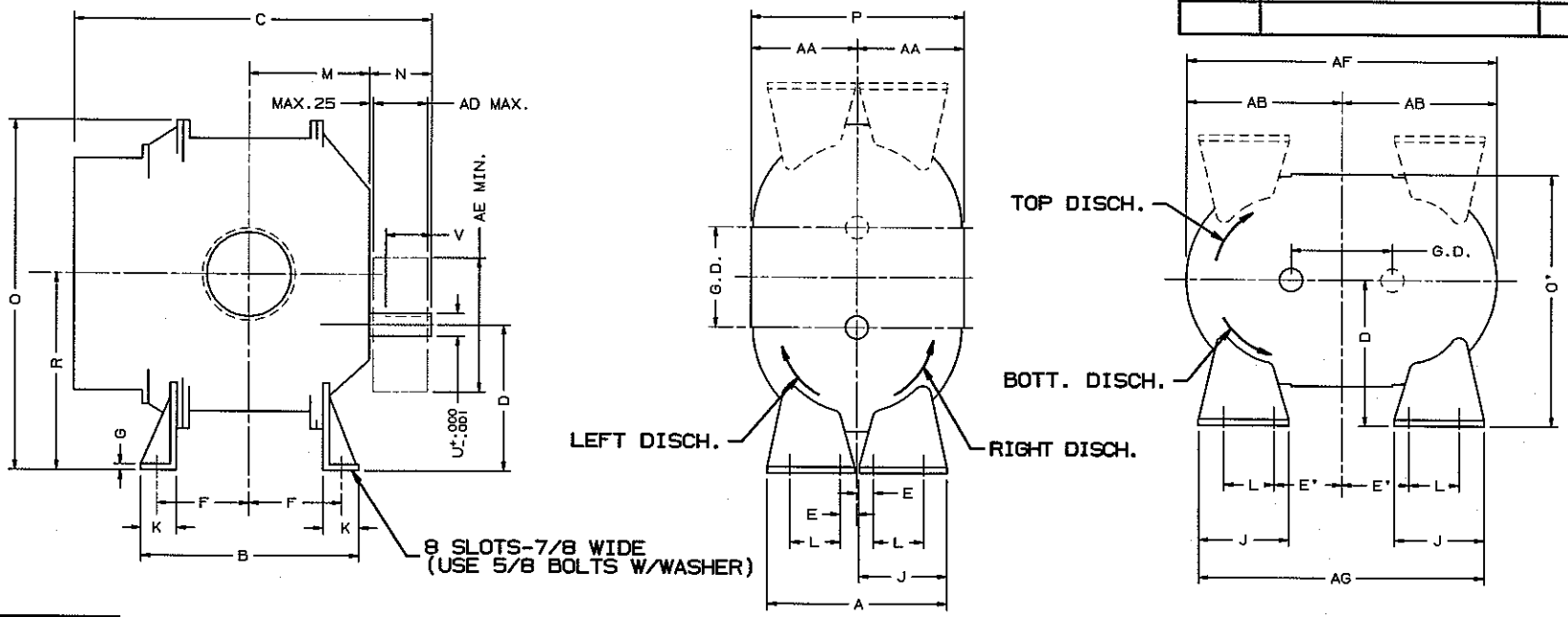

	6"FLG	8"FLG
OPENING	6.00	8.00
BOLT CIRCLE	9.50	11.75
FLANGE O.D.	11.00	13.50
NO. TAPPED HOLES	8	8
SIZE HOLES	3/4-10	3/4-10
TAP DEPTH	1.13	1.13

UNIT SIZE	APPROX. OIL CAP. VERT.	APPROX. OIL CAP. HORIZ.	G.D.
6"	28.3 FL OZ	52.1 FL OZ	6.00
7"	32.3 FL OZ	59.5 FL OZ	7.00

W-INLET
W'-DISCHARGE
AD-SHEAVE WIDTH
AE-SHEAVE DIA.
ALL DIM. IN INCHES

FRAME SIZE	A	B	C	D	E	E'	F	G	J	K	L	M	N	O	O'	P	R	U	V	KEYWAY	W	W'	AA	AB	AD	AE	AF	AG	APPROX WEIGHT
65	11.00	10.00	18.38	8.75	1.00	4.00	3.81	.38	5.38	2.13	3.00	5.63	3.56	21.63	15.13	12.75	11.75	1.375	2.75	.312x.156	3"NPT	3"NPT	6.38	9.88	3.44	8.00	19.75	17.00	245 LBS
68	"	13.00	21.38	"	"	"	5.81	"	"	"	"	7.13	3.69	"	"	"	"	"	"	"	5"NPT	5"NPT	"	"	"	"	"	"	285 LBS
615	"	20.00	28.38	"	"	"	8.81	"	"	"	"	10.63	"	"	16.25	15.00	"	"	"	"	6"FLG	6"FLG	7.50	"	"	"	"	"	425 LBS
76	14.00	11.75	19.94	11.00	2.00	5.50	4.88	.50	6.75	2.38	3.50	5.94	4.06	26.13	20.69	19.38	14.5	1.562	3.00	.375x.188	4"NPT	4"NPT	9.69	11.63	3.75	9.50	23.25	21.00	400 LBS
711	"	16.75	25.19	"	"	"	7.38	"	"	"	"	8.44	4.31	"	19.50	17.00	"	"	"	"	6"FLG	6"FLG	8.50	"	"	"	"	"	530 LBS
718	"	23.75	32.19	"	"	"	10.88	"	"	"	"	11.94	"	"	"	"	"	"	"	"	8"FLG	8"FLG	"	"	"	"	"	"	650 LBS

MFG. REF.

CONFIDENTIAL

THIS DOCUMENT CONTAINS CONFIDENTIAL INFORMATION OF ROOTS DIVISION, DRESSER INDUSTRIES, INC. IT SHALL BE HELD IN STRICTEST CONFIDENCE, AND BE USED ONLY IN CONJUNCTION WITH ROOTS DIVISION BUSINESS.

REF: EP938

- FLATNESS
- ANGULARITY
- PARALLELISM
- TRUE POSITION
- STRAIGHTNESS
- CONCENTRICITY
- PERPENDICULARITY
- PROFILE OF LINE
- PROFILE OF A SURFACE
- DIAMETER
- FINISH IN MICRO INCHES

	REVISIONS	BY	DATE	CHANGE NOTICE	CHKD.	APP
G	REF "F" DIM ON 68	RDR				
F	BOLTS CLARIFIED	DB				

	DATE
DR.	
CHKD.	
APP.	
DBV	
SCALE	
CAD FILE / DIRECTORY	

DO NOT SCALE FOR DIMENSIONS
ALL DIMENSIONS SHOWN IN BRACKETS [ ] ARE MILLIMETERS

ORDER No.

UNIVERSAL RAI BLOWER

DRESSER ROOTS

ROOTS DIVISION
DRESSER, INC.
HOUSTON, TX USA

DIMENSIONAL TOLERANCES UNLESS OTHERWISE SPECIFIED
FINISHED DIMENSIONS
TWO PLACE DECIMALS (.XX)—±.010 FRACTIONAL—±1/64
THREE PLACE DECIMALS (.XXX)—±.005

62753021

REV G

F:\FILE\FORM\BSIZE.GCM